# 28BYJ-48 – 5V Stepper Motor

The 28BYJ-48 is a small stepper motor suitable for a large range of applications.

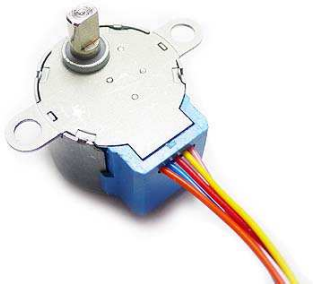

| | |
|---|---|
| Rated voltage : | 5VDC |
| Number of Phase | 4 |
| Speed Variation Ratio | 1/64 |
| Stride Angle | 5.625°/64 |
| Frequency | 100Hz |
| DC resistance | 50Ω±7%(25℃) |
| Idle In-traction Frequency | > 600Hz |
| Idle Out-traction Frequency | > 1000Hz |
| In-traction Torque | >34.3mN.m(120Hz) |
| Self-positioning Torque | >34.3mN.m |
| Friction torque | 600-1200 gf.cm |
| Pull in torque | 300 gf.cm |
| Insulated resistance | >10MΩ(500V) |
| Insulated electricity power | 600VAC/1mA/1s |
| Insulation grade | A |
| Rise in Temperature | <40K(120Hz) |
| Noise | <35dB(120Hz,No load,10cm) |
| Model | 28BYJ-48 – 5V |

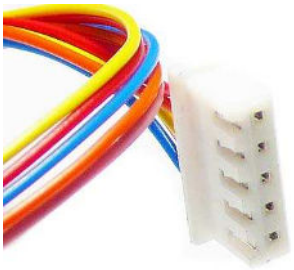

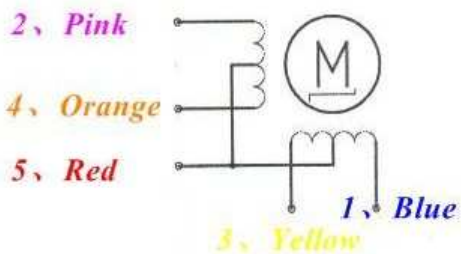


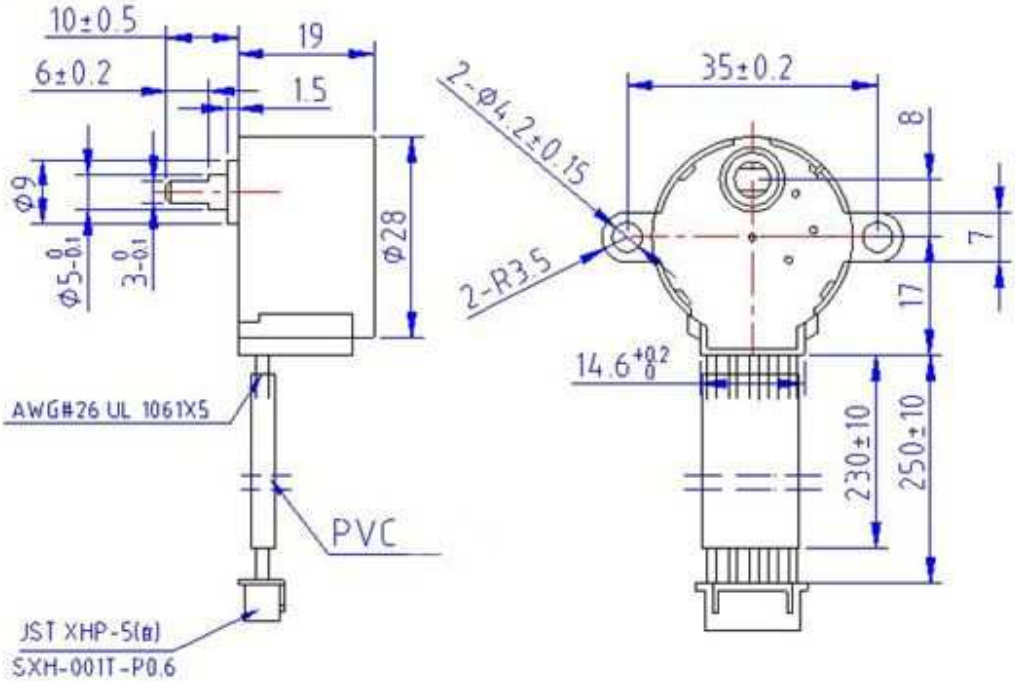


 Copyright © Welten Holdings Ltd - Specifications subject to change without further notice.